FIDC tracking water injection system

HFS-5

Instruction manual v3w1

GETTING TO KNOW THE AQUAMIST HFS-5

Over the last few years, demand for great engine power output is increasing. Cubic inches option is no longer the norm. Squeezing out 200-300hp per litre is within the reach of the ordinary folks on the street. The tuning industry has grown to embrace new tuning technique as well as readily affordable components to produce powerful and reliable engines.

We, at Aquamist has also coming to terms with the inevitable, meeting the demands of the market and offering new systems capable of supporting engine power output up to 1000+ BHP.

The HFS-5 reads the duty cycle of a fuel injector and delivers water proportional to fuel flow. Water quantity is metered by a High speed inline valve and flow is monitored by a turbine flow sensor. For clogged jet and severed hose. A number of options are available for the user to limit engine power in the absence of water flow.

We believe the HFS-5 meets all the requirement of a high-end water injection system for achieving fast engine transient and responses with absolute precision. Tracking the fuel delivery is the most reliable method to deliver your fluid flow under the whole engine operating cycle. Anything short of this means having to tailor your fuel map to compensate the irregular fluid quantity ingested by the engine.

Contents:

Checking the contents of the box carefully

This is a "must do" immediately after unpacking ....

Water pump

Unpack the corrugated sheet carefully. The pump should be labelled with the original custom Shurflo/ Aquamist part #8030 912 239 .

The white box

- 6M of 6mm OD nylon hose (806-261)
- 2M of 4mm OD nylon hose (806-266)
- 15A Fused water pump harness with 40A relay
- 75mm stainless hose clip and support bracket
- HSV with 6/4 mm hose connector and clips and 2-way sealed plug and socket set (806-244)
- 0.8 mm water jet (806-323) in plastic bag
- 0.9 mm water jet (806-324) in plastic bag
- 1.0 mm water jet (806-325) in plastic bag
- 1x 4mm Y-piece (806-362) in plastic bag
- 2x M8 x 1/8 BSP jet adaptor with plug (806-357)
- FIA2 (806-441) module with HFS-5 harness -3A FUSE
- 1x water tank adapter 1/8 BSP (806-270) + 6mm qck-fit elbow (806-376)
- 100 micron inline water filter (806-257)
- 4x M5x 40mm, nuts, washers and fasteners for pump
- 1x M6 grounding stud with washed and nuts and 6mm eyelet for pump ground
- 5-port brass manifold with 3/8BSP adapter. 3x blanking plugs, 1x 3/8 BSP-M to 1/8BSP-F adap-tor 2x 6mm 1/8BSP-M elbow.
- 1x 22cc surge arrestor/accumulator (806-409)
- 1x Pump label

DDS3v8 fluid monitoring system box

- Assortment of 22 AWG coloured hook-up wires
- 1x DDS3 Dash Gauge with 1.5 M x 8-way cable
- 1x Version 8 Junction box
- 1x water level switch with connector (806-280c)
- 1x Digital flow sensor (806-428)
- A set of wires for inter-connection

Note: Please contact your supplier immediately should you discover any missing parts.

Getting started on installation

Before installations guidelines

- The pump and water tank is designed to be fitted in the trunk. Install the water pump and inline filter below the water tank.
- Ensure all fittings are tighten and leak proof before filling up with methanol, test it with water first. If high concentration of methanol is used, please vent the tank's breather hole externally. Methanol is poisonous at high concentrations.

Assembling the pump in steps

- Gently assemble the two 3/8 BSP adapters into the pump without crossing the threads. The female one going into the inlet of the pump. Flow direction is moulded onto the plastic pump head. Ensure o-ring is properly seated.
- Ensure the accumulator lies horizontally after final tightening.
- Assemble the accumulator supporting bracket with the metal band supplied.
- Assemble the rest of the 1/8 BSP elbow fittings and blanking plugs. Ensure all o-ring type fittings are not overly tightened.
- Mark (dyes smeared on the bottom of the pump's rubber feet) and drill four holes for the pump.

Water tank components

- Ensure the outlet is facing the rear or the side of the tank. Drill/bore a burr-free 7/8" hole. Clear up all the burred edges and wash the tank thoroughly. No debris or plastic shaving should remained in the delivery system. 1-2 inch from the bottom of the tank is ideal.
- Same size hole for the water level sensor. Do not place the sensor near the washer pump, it will not operate properly. The float should swing upwards. Tank venting hole must be re-directly externally if high alcohol concentration is used.
- A tall and slim water tank is ideal for this type of application. Minimise delivery surge problems at low water level.

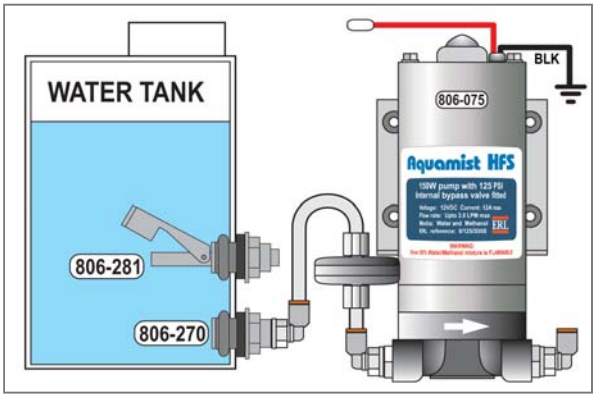

Junction box pin-out description

Pin1-8
Legends are colour matched and connects directly to DDS3 Gauge via a 8-core cable.

Pin 9-10
It will activate a wastegate solenoid valve directly when correct water flow is detected (system on). Pin 9 is a fused +12Vand Pin10 Switches to ground.

Pin 11-12
This relay output can be used to disconnect the OE boost control valve and switch to a "Dummy load resistor" to prevent "engine check lamp" activation. "Dummy Load Resistor" is supplied can be soldered in. It can also be used to switch pre-defined MAP on a third party EMS, if available. Open circuits under fault or "DDS3-OFF".

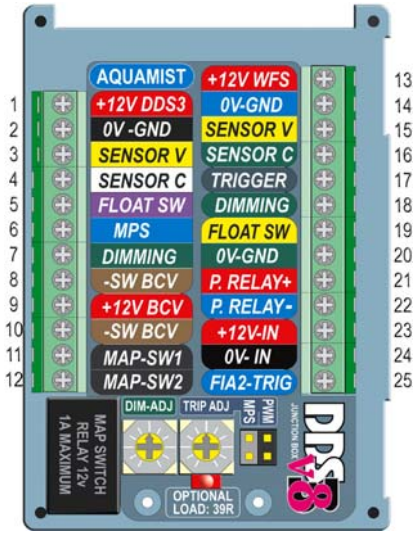

Pin 13-16
Flow Sensor connections, colour matched.

Pin 17
Failsafe triggering input. PWM or MPS (mode) - section by jumper link at the bottom of the board.

Pin 18
To car's +ve of parking lamp circuit to enable "DIM-ADJ" potentiometer on the DDS3 junction board

Pin 19-22
To water level switch and priming pump relay (up to 0.2A). Pin 22 switches to ground on activation when pin 17 is triggered.

Pin 23
Main +12V power supply to the DDS3. Wired to the Fuel injector's +ve supply.

Pin24
To 0V, Battery negative or chassis ground with good electrical contact.

Pin25
FIA2 Fuel injector amplifier trigger in the absence of manifold pressure switch or FIDC (fuel injection duty cycle) trigger is preferred. (for Aquamist use only)

TRIP ADJ potentiometer
Setting failsafe tripping range between 25 to 75% full scale of the signal seen at pin 17.

DIM ADJ potentiometer
Adjust display/backlit intensity on the gauge for night driving conditions.

MPS/PWM jumper link.
Selecting mode of operation: the WI system can be triggered by either Manifold pressure sensor (MPS) or fuel injector's Duty cycle (PWM). Adjustable between 12% to 72% via "TRIP ADJ"

Flow Sensor

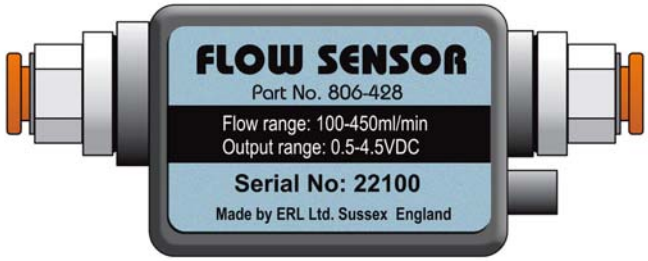

The standard sensor has a 1/8BSP (parallel thread) female port on each end. Do not use 1/8 NPT fitting male thread as the tapped thread may crack the ports. Use a 1/8BSP(M) to 1/8NPT(F) adaptor to convert the fitting if the hose you are using is not the same as the Aquamist type (4mm and 6mm OD). The sensor is bi-directional but do not change flow direction after long period of usage unless the two internal disc filters are properly cleaned. The sensor is suitable for use with water or methanol at any concentration. Sensor is fitted with 1/8BSP 4mm qck-fit hose connectors from factory.
The DDS3 junction board supplied all the necessary electrical power and signals to and from the sensor via a 4-core cable. Length can be extended up to 20 feet without any loss of accuracy.
Diagram below show the pin-out and functions of the DDS3 terminals. Sensor V refers to the actual flow signal from the sensor. Sensor C is for internal reference use only. If you need to data-log the flow rate, take the signal form the Sensor V terminal.

Do not install the sensor near any magnetic radiated devices such as ignition coil, motors or solenoids because it interferes with the hall effect sensor that reads the turbine speed. Avoid areas with high heat and vibrations. A cool and dry location is ideal.

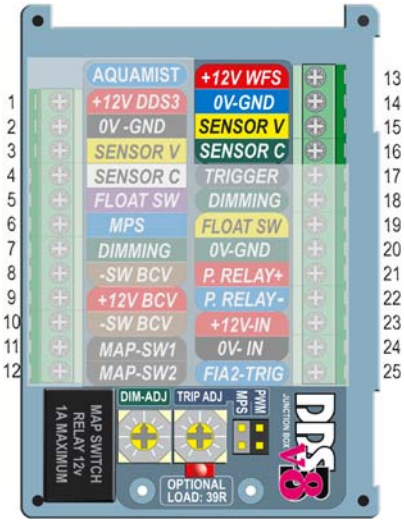

Never reverse the polarity of the power feed to the sensor or permanent damage may occur.

HFS-5/DDS3 Dash Gauge Functions

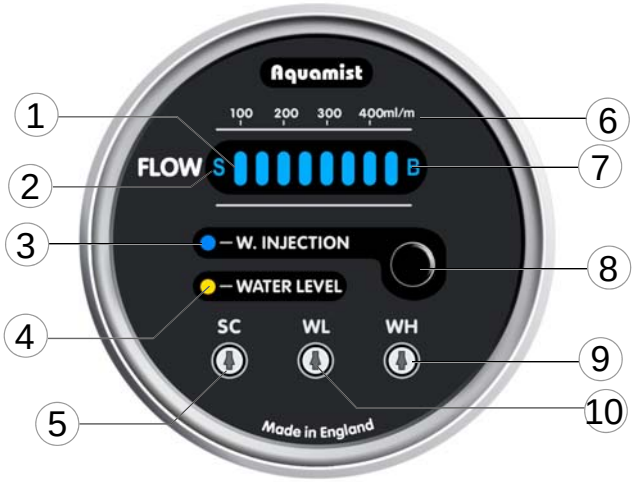

1. 8-element Bargraph Display (80-1200ml/min)
Each segment is equivalent to 50ml/min. of flow if the sensor is calibrated for absolute mode.
Depends on user preference, the display can be scaled to suit the liquid flow up to 1 litre per minute. (see 5)

2. "S" indicates the presence of sensor.
The letter "S" (sensor) must be lit after power up and stay on to show the sensor is functioning correctly.

3. Water injection ON led
This led comes on the when the dash button is depressed, showing the water injection system is enabled.
.

It will switch to full brightness when the DDS3 is triggered. (Pin 17)

4. Water Level Sensor led (yellow)
When the water level in the tank is below the sensor, this led will light up and disables the water injection as well as any other related functions such as high boost, priming pump and main pump.

5. SC (Sensor Calibration)
20-stepped potentiometer allow user to scale the flow sensor to give an ideal visual indication of a given flow rate. Ideally set the full scale of the sensor about two/three segments below maximum so a problem is easier to identify. It can also be used to trim the sensor to show a absolute or relative values for a particular set up.

6. Backlit flow legend
Fixed scale to indicate absolute flow rate. Sensor must be calibrated for each application for accuracy - scale will be updated .

7. "B" Boost Enabled led
This led lights up to show the "extended boost" over wastegate is triggered. Provided the following conditions are met: "Water Injection On" button is depressed, flow-rate is inside the set window and water tank is above the set level.

8. Water injection enable button
Due to extra power level achieved under WI, user want may want to reduce the power to the wheels in less than ideal driving conditions. Disabling the WI will reduce boost to wastegate bleed valve setting (if fitted) as well as switching to a less aggressive MAP on custom engine management.

9. Over-range setting potentiometer
It is just as important to monitor over-range conditions as well as under-range flow conditions. If a leak develops close to the water jet and starves the engine of the water, the user must know this condition. A 20-stepped potentiometer allows accurate and repeatable adjustment range.

10. Under-range setting potentiometer
This setting can indicate partial blockage and trapped air inside a delivery hose. Again a 20-stepped potentiometer is employed.

NOTE: The two range potentiometers "9"and"10" form the basis of a SOA (Safe Operating Area) that allow users to tune their car more safely.

Please note that methanol has only 80% mass of water and 50% latent heat of water. If water and alcohol mix is injected, allow a bigger jet to compensate this. This is a common mistake often made. Every 25% of methanol added should allow a 0.1mm Increase of jet size diameter.

Installation

The gauge will fit into any 52mm gauge pod and a two-prong bracket is provided. Do not over-tighten the thumb-wheel since it has an embedded o-ring to create high friction between the surfaces thus preventing loosening due to vibrations.

An open ended 8-core cable is provided for connecting the gauge to the junction box where all the other sensors and peripheral devices are terminated. We avoid using plug/socket termination because it is difficult to thread them through the firewall between the engine bay and passenger compartment

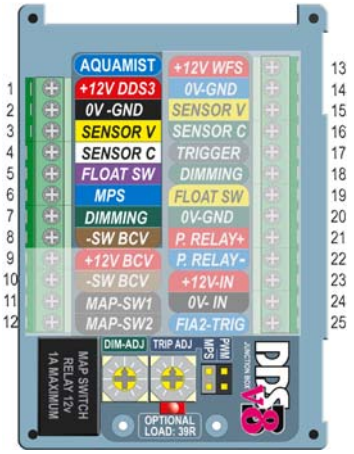

All the core colours are coded and matched to the legends in front of the terminal block, this helps to avoid any accidental termination errors. The wires should be stripped and twisted before inserting into the terminal blocks. The eight top left terminals are reserved for the DDS3 gauge.

Powering the system up for the first time

The HFS-5 is setup as PWM-triggered mode from factory, ie, when the fuel duty cycle has reached a preset %, the water injection commences. Please check the DDS3 junction box set to "PWM" on the jumper link.

Step 1: Powering up the system
Disconnect the hose from the water jet and locate it into a container, Ignition key on #1 & 2, the pump should remain idle. Switch the DDS3 on via the dash gauge button, again the system should remain idle, Two leds should illuminate - "S" and "water injection" Start the engine,

Step 2: FIA2
If the FIA2 is wiring and reading the fuel duty cycle correctly, the green led should illuminate after the engine is fired up and not before. You should see a faint pulse following the engine RPM. The red led should not illuminate at this stage.

Step 2: Manually triggering the DDS3 J.Box
Locate the "TRIP ADJ" potentiometer and turn it fully counter-clockwise. At 12% injector duty cycle (IDC) the WI should commence.
Blip the throttle to induce more IDC, you should see the red led below the potentiometer lights up.
Repeat it several times to confirm this.

Step 3: Check the rest of the system.
Upon the triggered period, you should check the following peripherals are receiving the correct signal from the DDS3 Junction board.

1. The red led on the FIA2 illuminates
2. The "water injection" led on the gauge should get brighter.
3. The HSV should click and buzz.
4. The water pump should turn on,
All above conditions should revert back after triggered period is over.
5. The DDS3 bargraph should register flow.

Make a note of anyone of the item/items did not meet the above conditions,contact Aquamist or your Supplier.

Step 4: Final check-up before going for a drive
Repeat the throttle blipping until all the air is purged out of the system. You should see a continuous stream of water coming out of the hose every time you blip the throttle, purging is now completed. Adjust the "TRIP ADJ" to mid way, reconnect the hose to the jet take the system for a test drive.

You have successfully installed the system. The system can also be triggered by manifold pressure by relocating pin 17 to a map sensor and set to"MPS".

Failsfe with a number of options

Assuming the system is running reliably and worked properly without any issues. Implementing the failsafe option is the next step. The DDS can offer a number of options to be integrated into an existing set up so that the engine can receive adequate protection when water injection flow is interrupted. Pin 9 to 12 is dedicated for this purpose

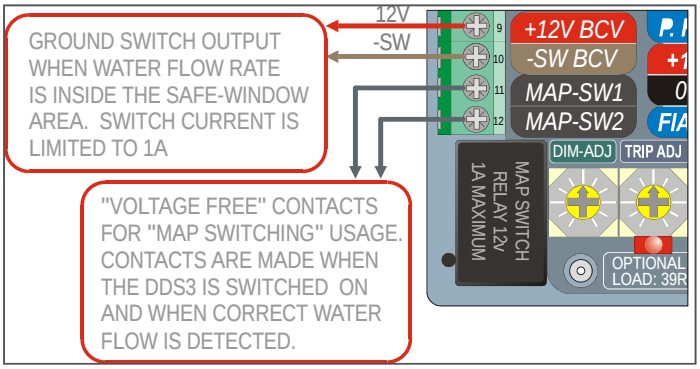

Standard factory car with boost controller:
Most turbo cars from the factory runs rich under boost conditions. With the help of a boost controller, you can utilise those excess fuel for power by raising the boost pressure. Water will be injected to replacing those excessive fuel. This is a very cost effective power enhancement modification. Wiring schematics for such a usage. (See page 16)

Standard factory car with light modifications:
Boost pressure is raised, Ignition and fuel map is modified by either of a off-the-shelf Rom chip replacement or a reflash. Water injection is used to assist in-cylinder intercooling and knock suppression. On those set up, cutting boost to wastegate pressure is ideal, in the event of water flow being interrupted. (see page 14)

Standard factory cars with piggyback modifications:
Piggyback ECU is another tuning option. In general, Signal from a load sensor is intercepted and modified before pass it to the existing engine management. These modification can be quite involved at times. For those applications, dropping the boost is the simplest option. Some high-end system offer several user selectable octane-compensated maps but it is rare switch-able "on the fly".

Factory EMS replacement with third party EMS:
This can possible be the most ideal set up for water injection. A dedicated input switch allow instant paging of alternative map in the event of water flow fault.

Boost control / MAP Switch

The DDS3 can perform a few useful functions to enable the engine to run leaner and more timing advance with minimum of risk to the engine. In return for some extra power and torque. Details of how this can be achieved are listed below.

Equipped with two outputs from the junction box, the DDS3 is able to alter boost or switch an alternative fuel/ignition MAP in the absence of water (when available). The first output can drive boost control bleed valve directly to increase boost in the "presence" of water (Pin 9/10), The second output (Pin 11/12) is in the form of "circuit break" relay output in the "absence" of water during high boost or high fuel duty cycle,

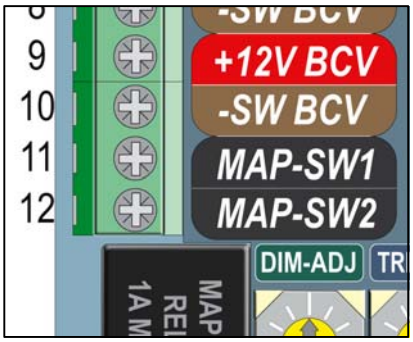

Both outputs revert the car back to standard setting when the DDS3 dash switch is turned off or the water tank level is low or water flow is not within the preset "flow-window"

Pin 9 and Pin 10:
Pin 9 is a steady +12V supply and Pin 10 switches to ground when the water flow is within the set limits. It is designed to activate a solenoid valve (not supplied) to raise boost. It can also be used to activate a MAP sensor clamp to trim fuel and advance ignition timing. This function is disabled when the DDS3 is turned off.

Pin 11 and Pin 12:
The remaining two connections Pin 11 and Pin 12 are "normally opened" voltage free contacts. When the DDS3 is first switched on, the contacts closes and stay closed until a "flow fault" is detected.
It is an ideal output to switch an aggressive fuel/ignition MAP off when water flow is interrupted. The same pair of contact can also be used to reduce boost by cutting the feed to a solenoid-type boost control valve,

Pin 4 (sensor calibration comparator input):
The pin is normally used for scaling the flow sensor but it can also be used to form a "real-time" close loop flow comparator, against a known flow curve. Please contact Aquamist for this advanced usage of this input.

The HFS-5 is supplied with a set of high-flow water jets, sized at 0.8, 0.9 and 1mm jet (see chart for flow rate). A Y-piece is supplied with the kit for twin jet applications. The two nickel plated brass jet adapters. Three pre-HSV in-hose restrictors are supplied for duty cycle/ flow matching, should good linearity is required.

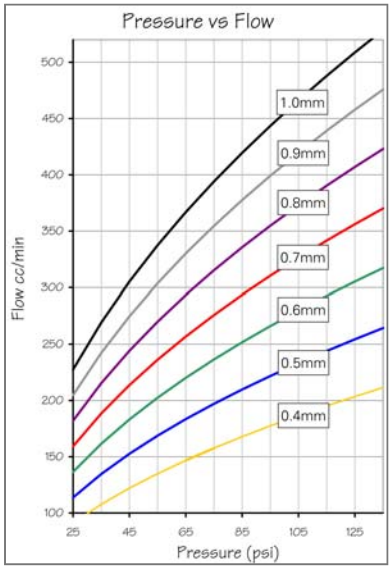

We recommend running between 10-15% water to fuel for increase safety purposes. This can be done by adding all your fuel injectors, multiply the required water percentage and then pick the nearest jet size to suit.

For more demanding applications, one can run up to 15 to 25% of water to fuel ratio. Up to 50% of methanol can be added to the mix to promote extra charge air cooling and octane enhancement.

Applications involving methanol mix beyond 50%:

Great care and attention must be taken to ensure the fluid tank is capable of handling methanol and designed for this type of application. These tanks are normally termed as Fuel cell. Available from most reputable racing parts suppliers. Anti-surge foam should be used for circuit racing. Follow the maker's guidelines carefully.

The breather hole must be vented externally with a suitable hose. All fluid delivery hose and fittings must be free of all leaks. Ensure the area is well ventilated and isolated from the driver's compartment. Take whatever measures to avoid any methanol fume building up in trunk area.

Methanol is highly flammable. The main delivery hose to the engine bay should be routed underneath the car. Ensure it is securely clipped and fastened. Avoid kinks, close proximity of moving parts and heat producing components. Please treat this recommendation seriously. If in doubt, ask advice from professional person familiar with this kind of application. DO NOT take any undue risks. It is recommend that a suitable fire extinguisher is placed within easy reach of the driver. All electrical connections must be properly tightened to avoid spark production.

Final checkup and setting up the failsafe.

Final check-up before going for a drive

Clip the water jet on the windshield and take it for a drive. Observe the jet pattern is cone shaped during spray and no splatter due to trapped air. Reconnect the hose to the manifold jet . You have now successfully installed the system.

Setting the DDS3 to perform fail-safe:

This can be regarded as the most important part of the entire system especially your car is tuned to work with high percentage of water/methanol.

Setting up the DDS3 in five easy steps:

It should be relative straight forward if you following the procedures as set out below:

1. Manually trigger the system with the jet/jets you intend to use. It will be better if you can do this jet spraying externally.

2. Adjust SC (sensor calibrate potentiometer) whilst spraying to register around 6 bars on the gauge.

3. Temporarily set the "WL" (window low potentiometer) fully counter-clockwise and the "WH"(window high potentiometer) fully clockwise.

4. Trigger the system and turn the WL clockwise until the "B" led distinguishes. Wind back 2-3 clicks after the "B" led comes back on and leave.

5. Wind the "WH" counter-clockwise until the "B" led distinguishes. Wind back 2-3 clicks further after the "B" comes back on and leave.

You have now set the fail-safe window properly. The system is now ready to perform full-time flow monitoring tasks. You may need to fine tune the window after the jet/jets are spraying against manifold pressure as flow will be slightly lower. Perhaps a click or two clockwise (more gain) on the "SC" potentiometer will do the trick.

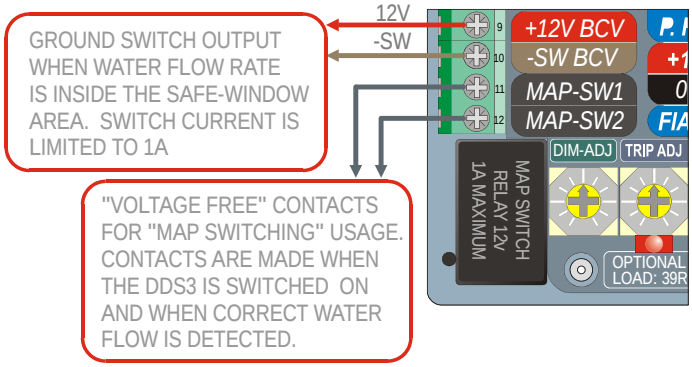

AQUAMIST HFS-5 SYSTEM GENERIC WIRING DIAGRAM pwm

TRIGGER MODE: PWM :: FAILSAFE: BOOST CUT

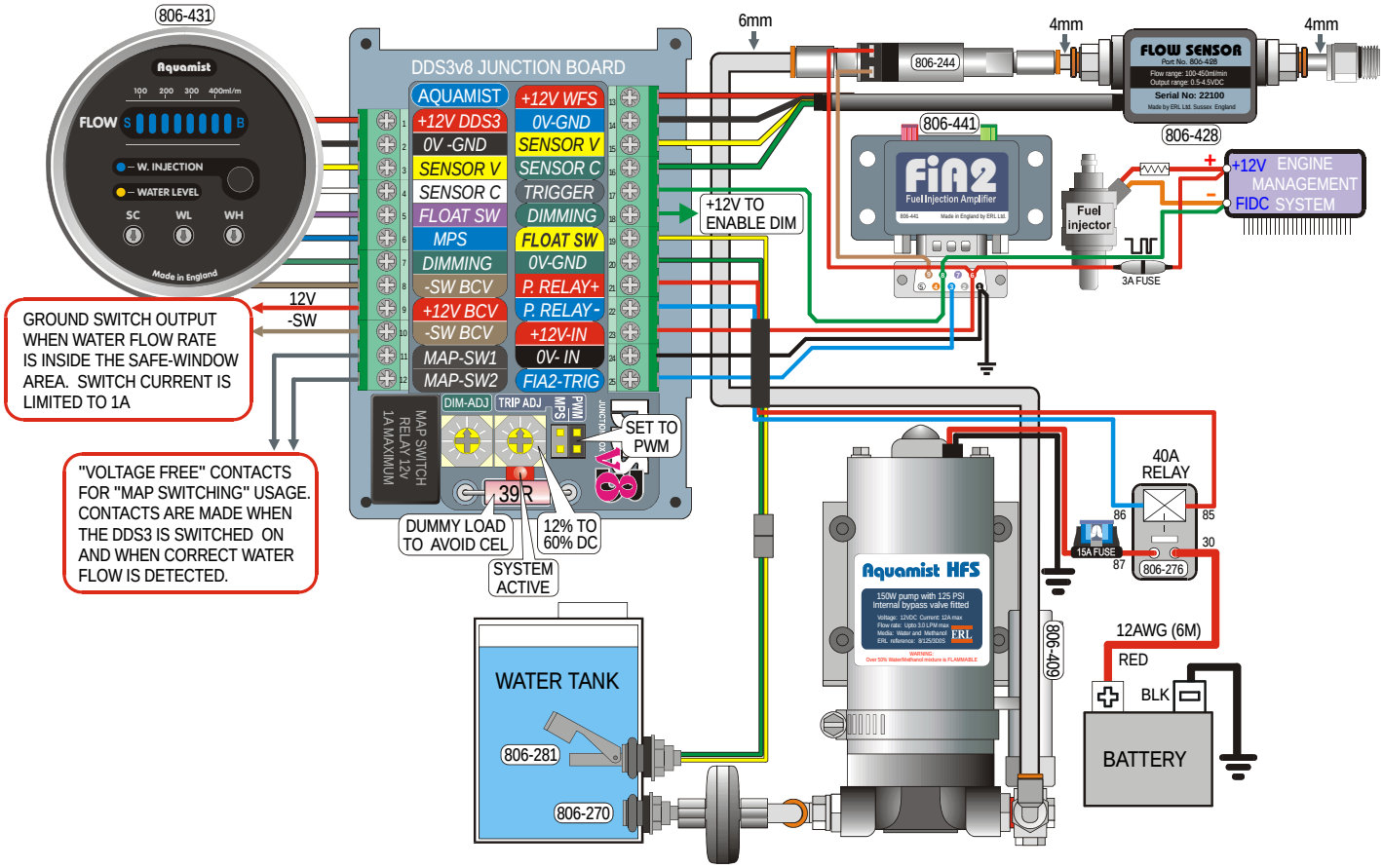

AQUAMIST HFS-5 SYSTEM GENERIC WIRING DIAGRAM G1

TRIGGER MODE: MPS :: FAILSAFE: BOOST CUT

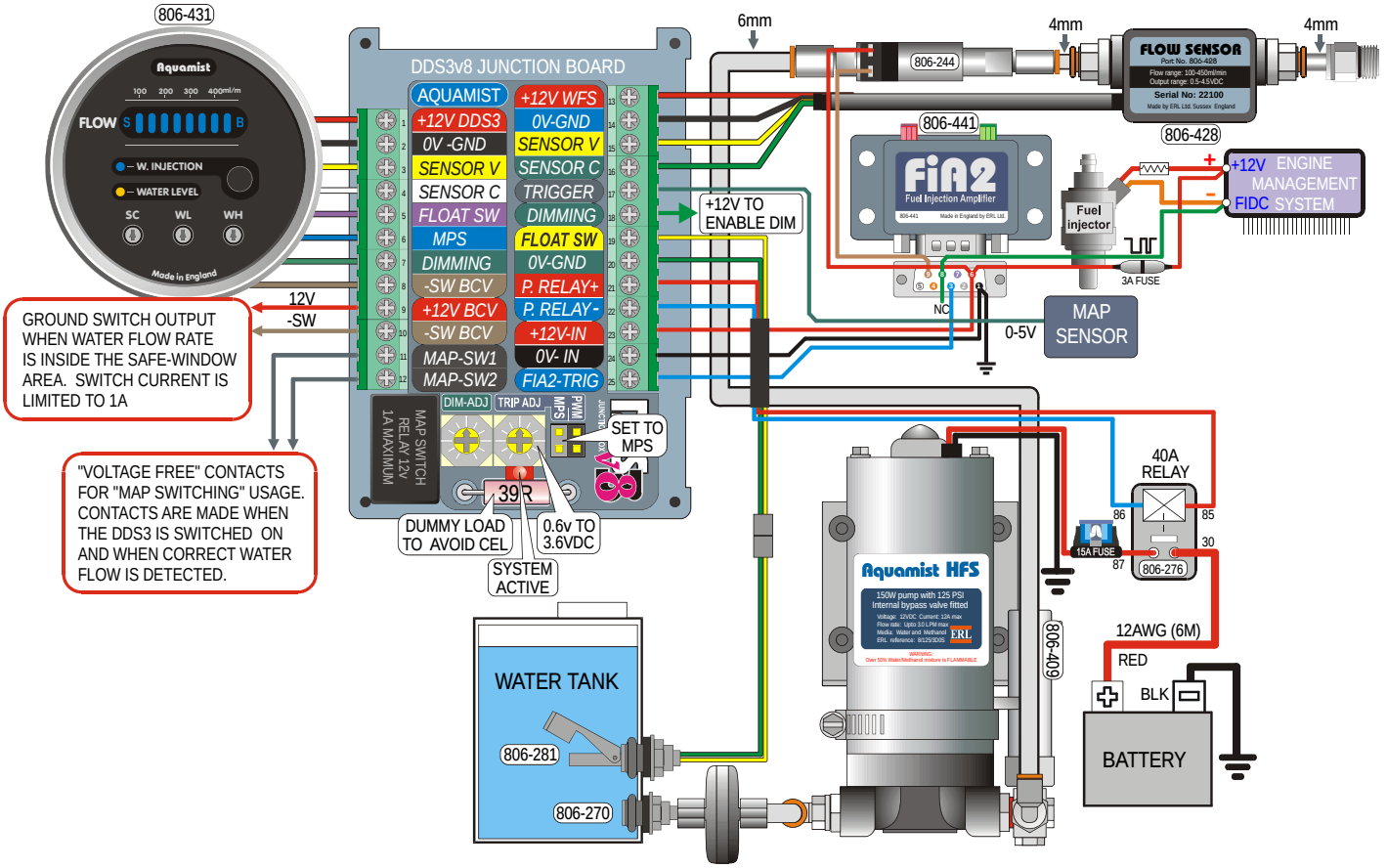

AQUAMIST HFS-5 SYSTEM GENERIC WIRING DIAGRAM

G1-PWM-BC

TRIGGER MODE: PWM :: FAILSAFE: BOOST CUT

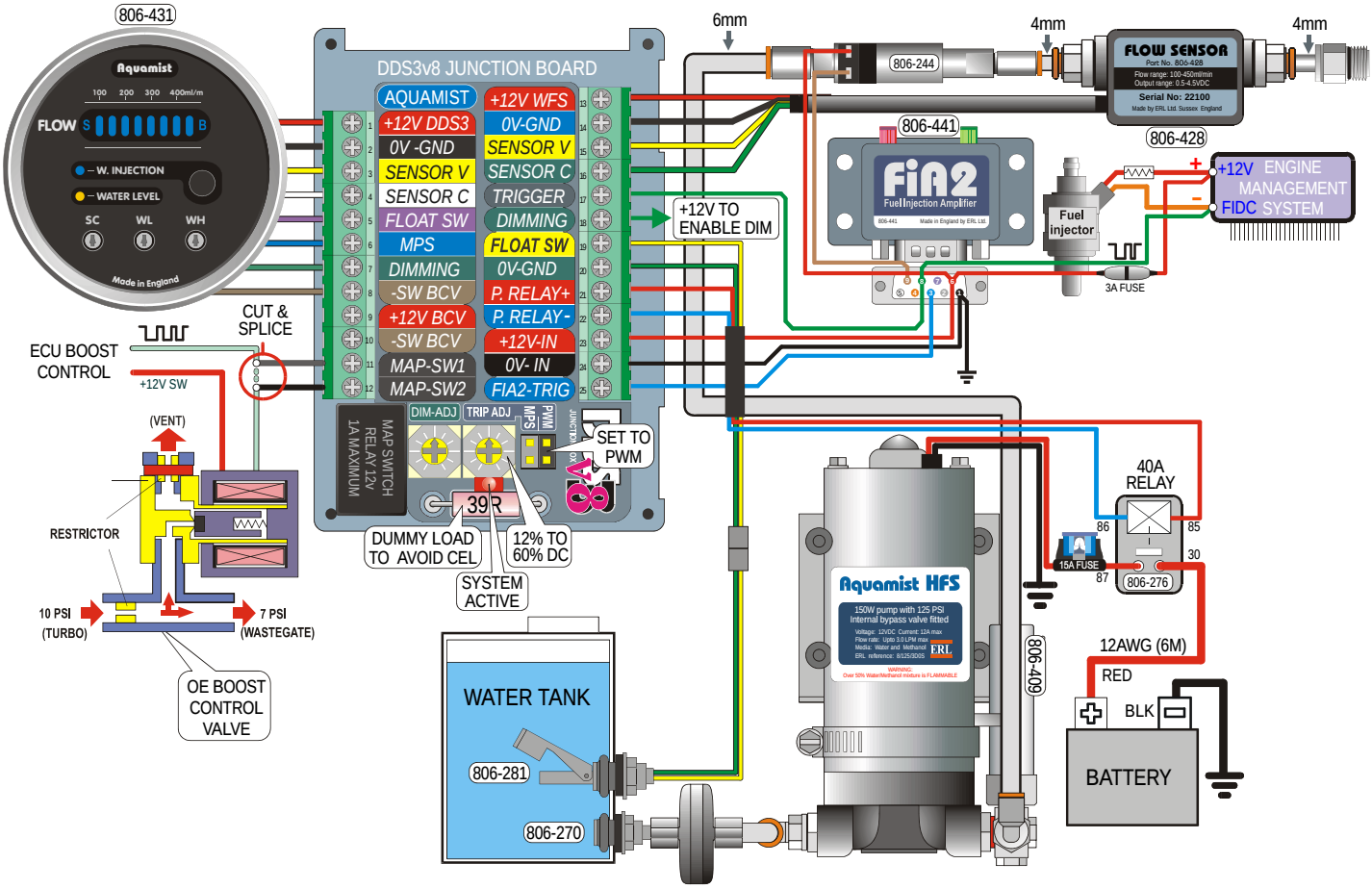

Electrical / Mechanical Specifications

DDS3-gauge

Input voltage: ..... 11.5 - 14.5VDC
Input current:
- Standby ..... 25mA DC
- Full Brightness ..... 250mA DC

Flow Sensor input voltage:
- Presence ..... 0.5V DC
- Flow ..... 0.55 - 4.5V DC

Manifold Pressure switch: ..... Ground "off" activation
Float Sensor Threshold: ..... Ground active
Sensor Calibrating Voltage: ..... 5-0V DC
Detection Window range:
- Low ..... 0.5v to 2.5V DC
- High ..... 2.5V to 5V DC

Boost valve drive ..... 1A max
Water on led:
- Standby ..... 5mA DC
- WI active ..... 15mA DC

Water level led: ..... 15mA DC
Boost enable led: ..... 8mA max
Bargraph led: ..... 8mA per segment max
Bargraph type:
- Red ..... Super Bright Red
- Blue ..... High efficiency

Dimensions ..... 52mm x 45mm (H)
Operating temperature range: 0-50C

Flow sensor

Input voltage: ..... 10-15V DC
Input current: ..... 25mA DC
Output Voltage: ..... 0-5V DC
Output current: ..... 5mA max
Dimensions: ..... 40x 75 x 20mm(H)

Water level switch

Input voltage: ..... 50VDC max
Switch current: ..... 100mA max
Panel hole dimension: 22mm

Junction box

Input voltage: ..... 11.5-15V DC
Input current:
- Standby: ..... 30mA DC

Output currents:
- Priming .Pump: ..... 1A DC max
- Boost valve: ..... 1A DC max
- Boost cut relay ..... 2A DC max
- Flow sensor ..... 50mA max

In circuit Fuse links:
- DDS3 gauge: 0.5A
- Priming pump: 0.5A
- Boost valve: 1A
- Flow sensor: 0.2A

Dimensions: ..... 75 x 57 x 17mm(H)

Water pump

Input voltage: ..... 11.5-15V DC
Input current: ..... 12A max DC
Flow: ..... 2 litre per min
Dimensions: ..... 240 x102 x 104mm(H)

FIA2

Input voltage: ..... 11.5-15V DC
Input current: ..... 2A max DC
Fuse: ..... 3A quick blow type
Dimensions: ..... 68 x39 x 21mm(H)

In Car Dash Gauge (8-core cable)

Pin	Colour	Size	Description	Electrical parameter
1	Red	24awg	+12V power supply to gauge	50mA @12v
2	Black	24awg	0V power supply to gauge	50mA @12v
3	Yellow	24awg	Flow Sensor input voltage	0-5 VDC @10mA
4	White	24awg	Flow Sensor calibration output voltage	5-0 VDC @1mA
5	Purple	24awg	Float Sensor from water tank	Ground active
6	Blue	24awg	Manifold Pressure Switch (806-157)	Normally closed
7	Green	24awg	Night driving dimming connection	+12V active
8	Brown	24awg	Watergate bleed valve option (SW-)	1A @12V max.

Flow Sensor (4-core cable)

Pin	Colour	Size	Description	Electrical parameter
1	Red	24awg	+12V power supply of Flow Sensor	30mA @ 12v
2	Blue	24awg	0V power supply of Flow Sensor	0V Ground
3	Yellow	24awg	Flow Sensor output voltage	0-5VDC@10mA
4	Green	24awg	Flow Sensor calibration input voltage	5-0VDC@1mA

DDS3 Junction Box (25-ways - Pin 1= top left corner. Pin 25 bottom right corner)

Pin	Colour	Size	Description	Electrical parameter
1-8	------	8-core	Same as Dash Gauge Above	------
9	Red	22awg	+12V power supply to bleed valve	+12V, 1A fused
10	Brown	22awg	Switching to ground for Bleed valve	1A maximum
11	D.Grey	22awg	Map Switch/Boost cut (EMS side)	1A maximum
12	D,Grey	22awg	Map Switch/Boost cut (BCV side)	1A maximum
13-16	------	4-core	Same as Flow Sensor as above	------
17	D.Blue	22awg	FIDC detect or MAP senson	0 to 5V input
18	Green	22awg	Night driving dimming connection	+12V active
19	Yellow	22awg	To ground when tank is empty	0.25A maximum
20	Green	22awg	Common ground	0.25A maximum
21	Red	22awg	Priming P. relay +12V supply (0.5A FUSED)	0.5A maximum
22	Blue	22awg	Priming pump relay ground switch (active)	1A maximum
23	Red	18awg	+12V switched power supply for all	3A maximum
24	Black	18awg	0V ground supply for all	3A maximum
25	Blue	22awg	FIA2 trigger	0.1A Maximum

FIA2 harness (green cable shell)

Pin	Colour	Size	Description	Electrical parameter
1	Black	22awg	Ground power supply (0v)	2A @ 12v
3	Blue	22awg	WI control input (0v=disable)	20ma
6	Red	22awg	+12V power input (via injector +) Fused	+12VDC@3A
6	Red	22awg	+12V to High Speed Valve	+12V 1A max
8	Green	22awg	FIDC signal pickup input (-ve switched)	-PWM @10mA
8	Green	22awg	FIDC trigger input for the DDS3v8 JB	-PWM @1mA
4	Brown	22awg	PWM drive to High Speed Valve	1A PWM drive

GUARANTEE

ERL guarantees, at our option, to replace faulty goods supplied or repair the same, subject to the claim made in writing to us within 12 months after the sale by us, or for such other period as may be indicated by us for specific products in lieu of any warranty or condition implied by law as to the quality or fitness for any particular purpose of the goods.

Any claim against us must be made to us in writing within the period of 12 months after the sale by us , or our agents, or our distributors of goods in question (or such other period as may be indicated by us) and any goods to which the claim relates must be returned to us within that period suitably packaged and cleaned and, with any particular instructions which we may have notified to you at the time of supply. Original invoice, the nature of any claimed defect must accompany the goods in question prior to despatch to us.

If these requirements are not complied with our Guarantee shall not apply and we shall be discharged from all liability arising from the supply of defective goods.

LIABILITY

We shall not be under any liability whether in contract, or tort or otherwise and whether or not resulting from our negligence or that of our employees, in respect of defects in goods supplied or for any damage or loss resulting from such defects.

We shall not be under any liability for damage, loss of expense resulting from failures to give advice or information or giving the incorrect advice or information whether or not due to our negligence or that of our employees.

In no event shall any breach of contract on our part or tort (including negligence) or failure of any time on our part that of our employee give rise to liability for loss of revenue or consequential loss or damages arising from any cause whatsoever.

Note: ERL reserves the right to make changes to our products without notice in order to improve design performance and reliability.

THE END